The information contained in this drawing is the sole property of CWS Coil Winding Specialist.
Any reproduction in part or whole without written permission of CWS Coil Winding Specialist is prohibited.

REVISION HISTORY

REV	ECN	DESCRIPTION	SIGN & DATE BY	DATE	CHK	DATE
A		PRE-PRODUCTION RELEASE	RPR	7/13/04	JLAU	7/14/04

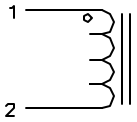

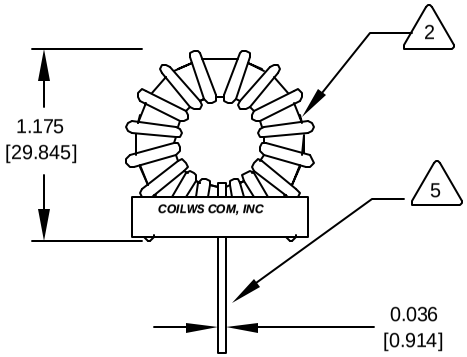

FRONT VIEW

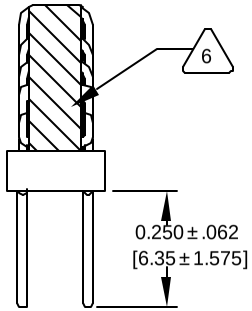

SIDE VIEW

6 USING A PERMANENT MARKING METHOD
MARK PART NUMBER AND REVISION, IF APPLICABLE
IF NEEDED, WRAP INDUCTOR WITH GLASS TAPE

5 TO THE CORE
MUST REST FLAT ON PCB). LEADS MUST BE TANGENT
FLUSH WITH THE COIL EDGE, AS SHOWN (I.E. COIL
REMOVE INSULATION AND TIN LEADS 0.50 INCH

4 WIND COILS EVENLY SPACED AROUND THE CORE
CONSTRUCTION:

3 HI-POT TEST FOR WINDING TO CORE ISOLATION = 500VDC MIN
CURRENT RATING : 4.5 AMPS, 40 °C TEMP. RISE, NO AIR FLOW
DCR = 52.0 MILLI-OHMS MAX.
DC BIASED = 4.5 AMPS, INDUCTANCE = 123 UH
DC BIASED = 6.0 AMPS, INDUCTANCE = 120 UH
INDUCTANCE = 150 UH +-10% @ LOW DC BIAS, 1 KHz, 250mV
SPECIFICATIONS:

2 WIRE: UL RECOGNIZED 200°C RATED MAGNET WIRE
CWS BYTEMARK OR OTHER APPROVED PART
CORE: COATED HIGH FLUX TOROIDAL CORE

1 RATING CLASS B (130°C MIN.) REQUIRED
MATERIAL: UL RECOGNIZED 94V-0 FOR FLAMMABILITY

NOTES: TOROIDAL POWER CHOKE. ALL DIMENSIONS IN INCHES

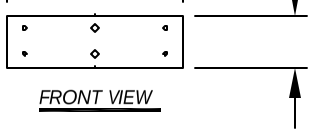

FRONT VIEW

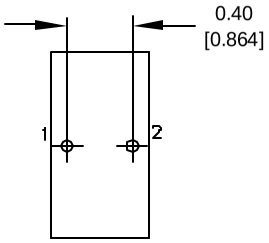

MOUNTING HOLES PATTERN

	CODE IDENT	MFG. P/N	DESCRIPTION	ITEM NO.

PARTS LIST

AUTOCAD		X
SOLIDWORKS		
SIGN		DATE
DRAWN	RPR	7/13/04
CHECKED	JLAU	7/13/04
ENGR.	KSUN	7/13/04
APPR.	JLAU	7/13/04

UNLESS OTHERWISE SPECIFIED
DIMENSIONING AND TOLERANCE PER ANSI Y14.5M
ALL DIMENSIONS ARE IN INCHES AND [MILIMETERS].
TOLERANCE INCHES: .XXX=±.003 .XX=±.015 ∠=±0°30'
TOLERANCE METRICS: .XXX=±.127 .XX=±.38 ∠=±0°30'
ANGLE PROJECTION
DO NOT SCALE DRAWING

COILWS COM, INC
WWW.coilws.com

CWS Coil Winding Specialist.
1510 E. Edinger Ave.
Unit B. Santa Ana, CA. 92705

TITLE: Toroidal Power Chokes
Toroid Inductor

SIZE B | DWG. NO. MHF229-151M-4.5A | REV A

SCALE 2=1 | SHEET 1 OF 1

EP FORM0005 REV 3 10/01

CAD-FILE: